Lenham Range

Lenhams are designed to ease many of the more tedious tasks that accompany fowl keeping, such as cleaning. It incorporates features that have evolved through many years of bird keeping where you learn the short comings of ill conceived poultry housing the hard way. All the Lenhams have removable nest boxes and side walls, removable perching, ventilation, and carrying handles. The external access nest box bank and the wall opposite lift away from the house, allowing you to open right through for maximum access. The removable perching has been arranged in two banks either side of the central pop hole door and are angled to encourage the early roosting birds to occupy the highest perches, to avoiding congestion - even the birds at the bottom end of the pecking order get a perch. The walled corridor between the perch banks may be drawn out through the pop hole door. With the perches and corridor fitted the hens cannot get under the perching, so are barred access to accumulated night droppings. An old feed bag left under the perching is a simple aid to cleaning. The central corridor has another advantage in being the only part of the ark floor the birds can walk on before mounting a perch, so takes the brunt of any soiling brought into the house by the hens. Because it can be removed, the normally tedious task of scraping dried compact soiling becomes much easier. A pet hate I have is birds using the nest boxes as sleeping quarters, or they perch on the edge of the boxes, soiling the nesting litter which results in dirty and, in my opinion, unappetising eggs. So we have incorporated night shutters which when in place, stop occupation of the nests, keeping fowl fouling to a minimum.

LENHAM 503 IN 'CLEAN ME' MODE

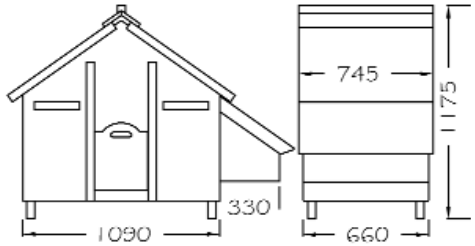

The Lenham 503 will accommodate six laying birds, or three large fowl hens with cockerel. The nest bank can be fitted on ether side.

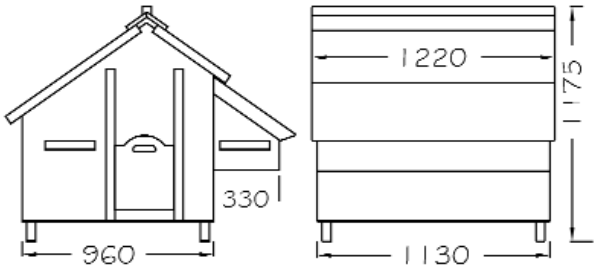

The Lenham 504 will house twelve laying hens or five large fowl with a cockerel. The nest bank can only be fitted to the wall right of the pophole.

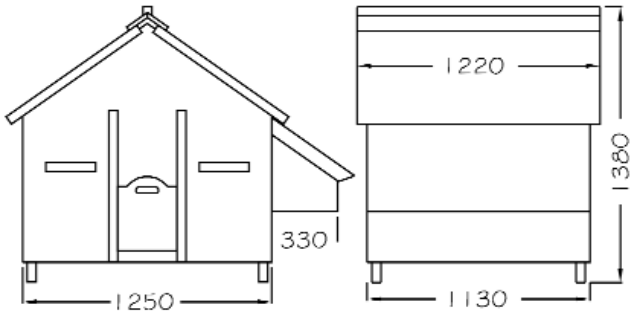

The Lenham 505 will accommodate up to twenty four standard laying hens, or ten larger fowl and a cockerel. The nest bank can be fitted to etherside wall.

LENHAM OPTIONS.

RAMP (all Lenhams) Aids younger birds into the house. Helps prevent mud puddling at the entrance.

SECOND POPHOLE (all) A second pophole in the back gable allows dual access especially handy with split runs.

ACCLIMATISING WALL. (all) A semi permanent wire wall that sits behind the removable side wall. Used to harden off young birds and to introduce new birds to the house.

SECOND NEST BANK (L503 L504) The L503 and L504 can have the nest boxes fitted to either side wall, so if required we can supply a second nest and lid so you can have nests both sides.

RUNS (all) See Rye Run, Safe Guard & Quick Safe pages.

ELECTRIC FENCING (all)Gives the fox a shock, a system of netting that can be simply and quickly erected around the house. Energised by battery or transformer. (call us for details or see our web site)

GIZMO. (all)Opens an auxiliary pophole door automatically at day break and shuts it at night (call us for details or see our web site)

FEEDERS & DRINKERS. (all) We will advise which utensils best suit your purpose

TREATER .*FORSHAM WOODSEALER* is clear finish, which is animal safe and durable enough to be recommended by the manufacturer for marine use.