Proper Hutch

Our Proper Hutches are made from real wood, tongue and groove boarding, on a frame of fully planed, joinery quality timber and have a heavy-duty mineral felt on the roof. For extra security the wire front is heavy gauge galvanised welded mesh. It's the type of hutch dad would like to build ..... if he had the time.

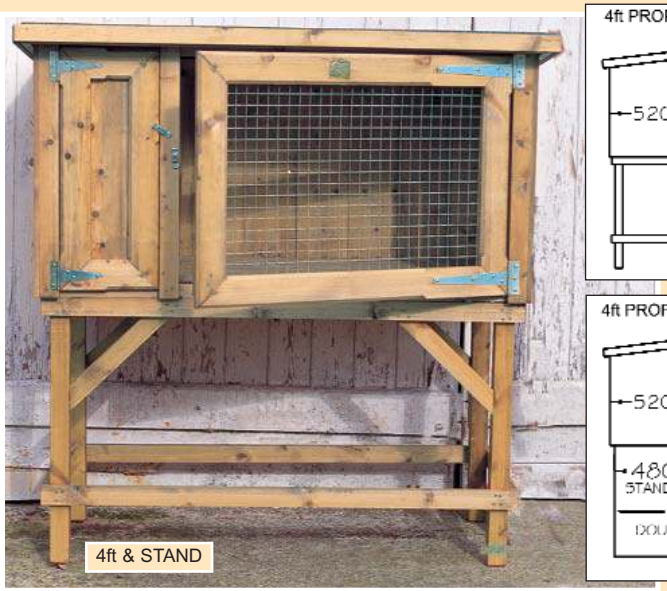
4ft & STAND

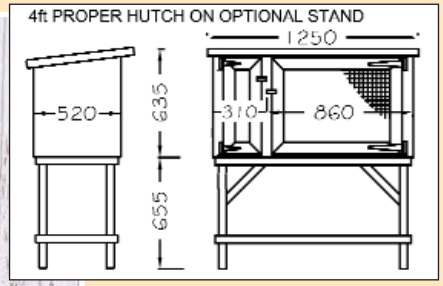

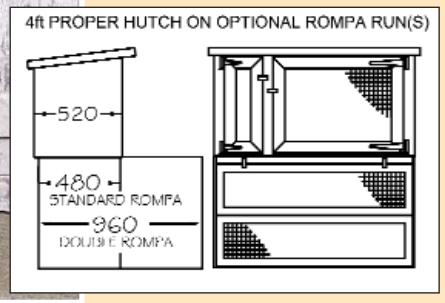

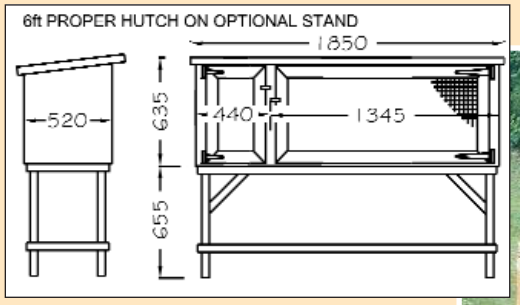

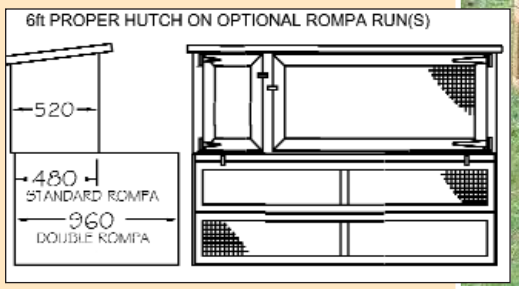

6ft ON A DOUBLE ROMPA

PROPER HUTCH OPTIONS

STAND. (4ft & 6ft)
A table support stand.

NIGHT SHUTTER. (4ft & 6ft)
A board that is inserted in the wire door for extra shelter and security after dark.

ROMPA RUNS 4ft & 6ft)
It did not take a lot of imagination to develop the Rompa run, just a little innovation. The run gives your pet another level of life. A stand and combination run that enables your pet to go down a ramp into the 'basement'. We supply a replacement floor for your hutch so it may be fitted retrospectively. and by putting the original floor back , can convert the hutch back to standard .We have Rompa Runs for the 4 and 6ft Proper hutches. Both Rompas have top opening wire doors so you can access the 'basement' area. We tried the original Rompa design on a rabbit which shall we say 'lacked motivation' you could only tell its head from its rear because standard rabbit design dictates you don't get ears on bums! After a few days it was hurling itself up and down the ramp to such a degree that it was questionable as to whether it was same animal.
The Rompa comes in two sizes
STANDARD ROMPA
& the DOUBLE ROMPA

TREATER .
FORSHAM WOODSEALER is clear finish, which is animal safe and durable enough to be recommended for marine use.

SNUGGLE SAFE .
A heat pad that is heated in the micro wave oven and stays warm for up to eight hours

The Cat Chalet

You have come home after a day out, the cat has been orienteering around the kitchen work tops leaving a muddy trail to confirm its progress and, judging by the variation of paw prints, kitty has been entertaining the local branch of the caterwaulling club. Here at last is the answer to what to do with the cat when you are out. Shut the cat out in its own place, free to entertain who it wants. It will still not tidy up after itself, but at least the mess is confined. The chalet has two defined sections, a feed area just inside the cat flap door and a slumber room with patio door so the cat can bask in the sun before the glass.Safe, secure and comfortable, a feline catchalor pad

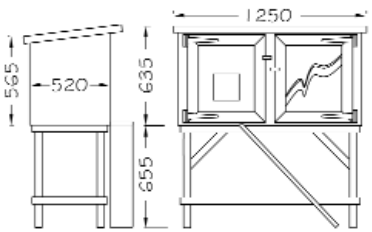

CHALET OPTIONS

STAND. (4ft & 6ft)
A table support stand.
TREATER .
FORSHAM WOODSEALER is clear finish, which is animal safe and durable enough to be recommended for marine use.
SNUGGLE SAFE .
A heat pad that is heated in the micro wave oven and stays warm for up to eight hours